S..-SVXCR-.. 鋼柄 Steel shank

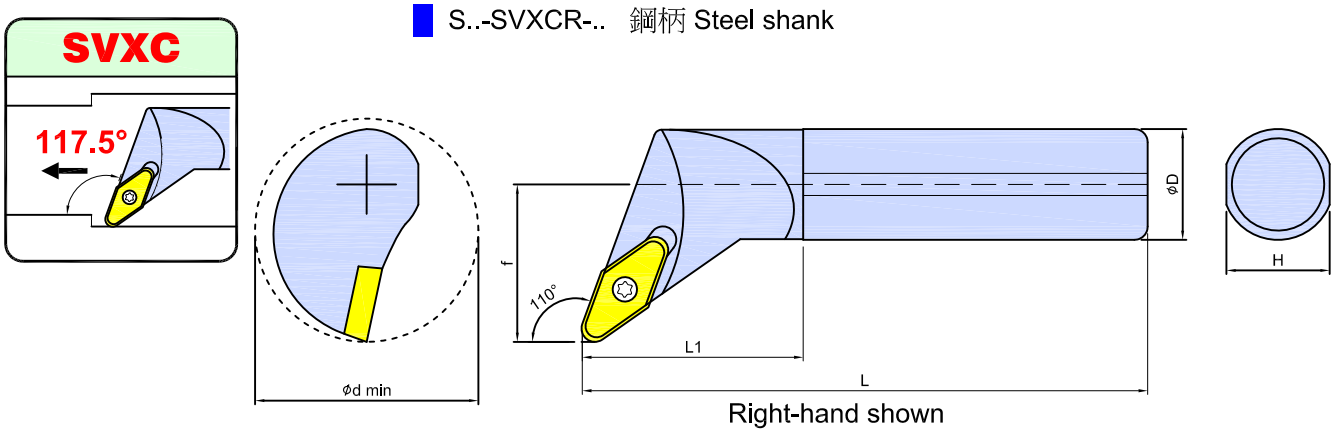

Right-hand shown

Ordering code	Dimensions,mm						Insert	Shim	Screw	Wrench	Screw	Wrench
	D	L	L1	f	H	dmin						
S25N-SVXCR-22-A125-D71	25	160	50	35.5	23	50	VC..2205..	−−	−−	−−	MS5011A	TF20

S..-SVXCR-.. 鋼柄 Steel shank

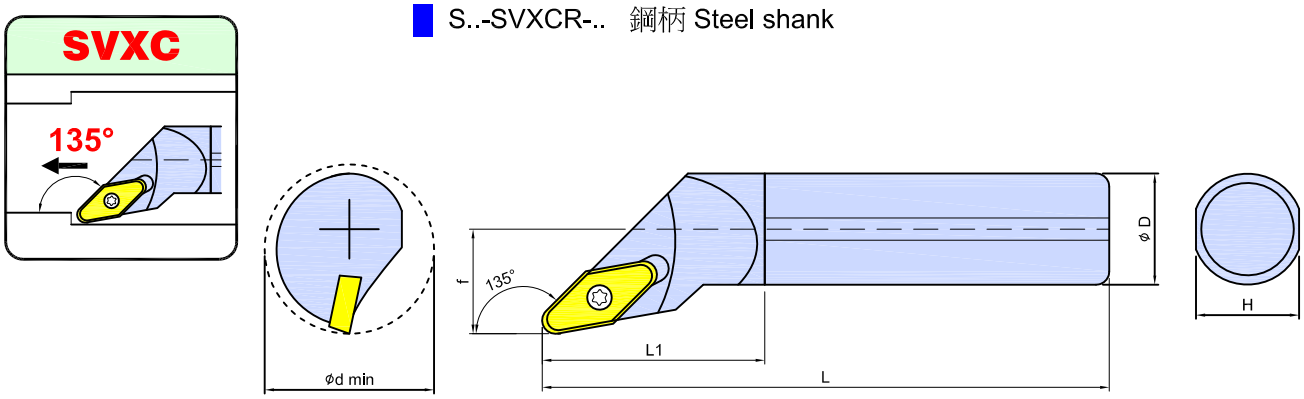

Right-hand shown

Ordering code	Dimensions,mm						Insert	Shim	Screw	Wrench	Screw	Wrench
	D	L	L1	f	H	dmin						
S25N-SVXCR-22-A100-D47	25	160	50	23.5	23	38	VC..2205..	−−	−−	−−	MS5011A	TF20